THIS DRAWING IS THE PROPERTY OF DELTA CORPORATION LIMITED
AND MUST NOT BE RETAINED OR COPIED WITHOUT PERMISSION.

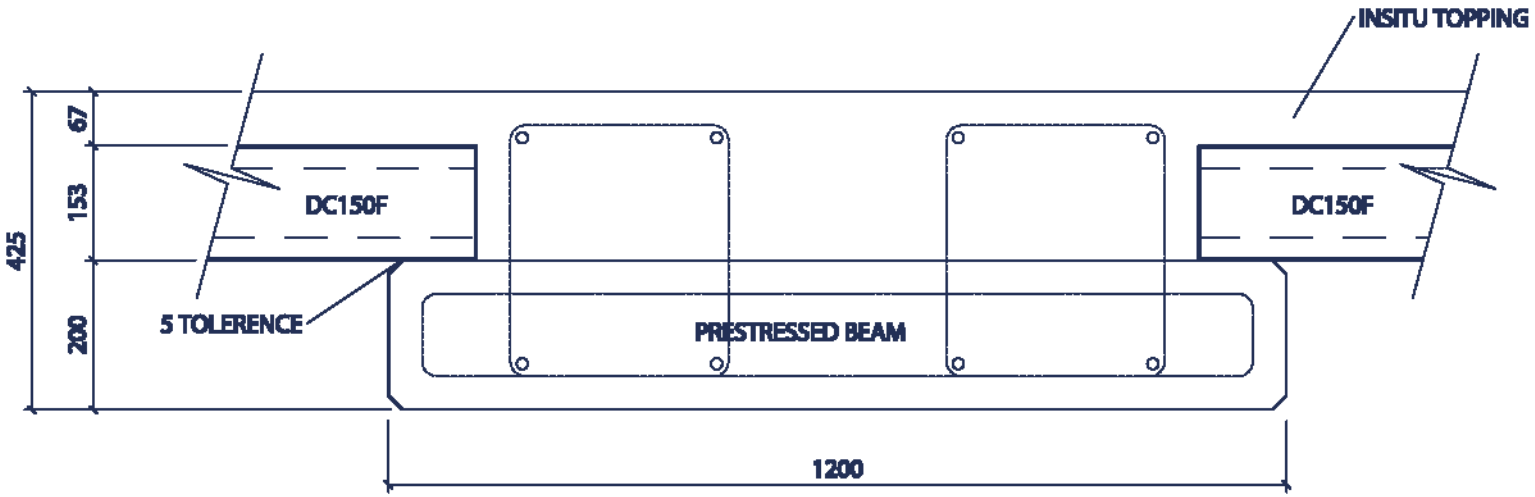


## GRID 8100(BEAM SPAN) x 8500(DELTACORE)

NOTE: DO NOT SCALE FROM THIS DRAWING.

REGIONAL OFFICE AND FACTORY,
210 Chesapeake Road,
Baltimore MD, U.S.A. 21220.
Phone 2[illegible] 11 Fax 2[illegible]

DELTA
CORPORATION LIMITED

| REVISION | CHKD | NO | DATE |
|---|---|---|---|
| | | | |
| | | | |
| | | | |
| REFERENCE | | X | 22.2.00 |

DELTACORE & PRESTRESSED
BEAM TYP. ARRANGEMENTS

DELTA CORPORATION

| | | | |
|---|---|---|---|
| COMPANY | DELTA | JOB NO | 991 |
| DRAWN | ST | | |
| CHECKED | | DRAWING NO | DCB2 |
| SCALE | NTS | REV NO | X |
| DATE | 22.2.00 | | |